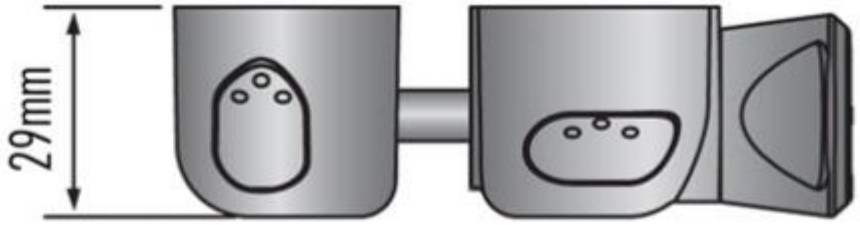
29mm

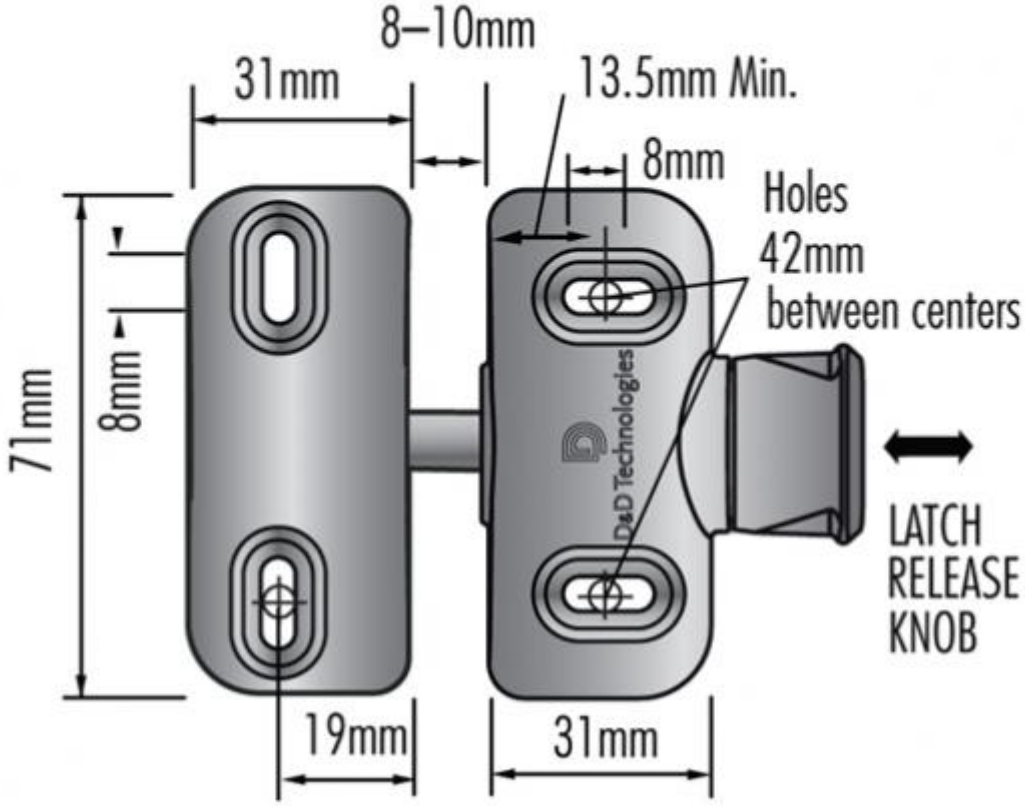
8–10mm
31mm
13.5mm Min.
8mm
Holes
42mm
between centers
71mm
8mm
D&D Technologies
LATCH
RELEASE
KNOB
19mm
31mm